DESIGN + ENGINEERING
GROHE GERMANY

96.867.031/ÄM 243861/11.18

www.grohe.com

Pure Freude an Wasser

GROHE

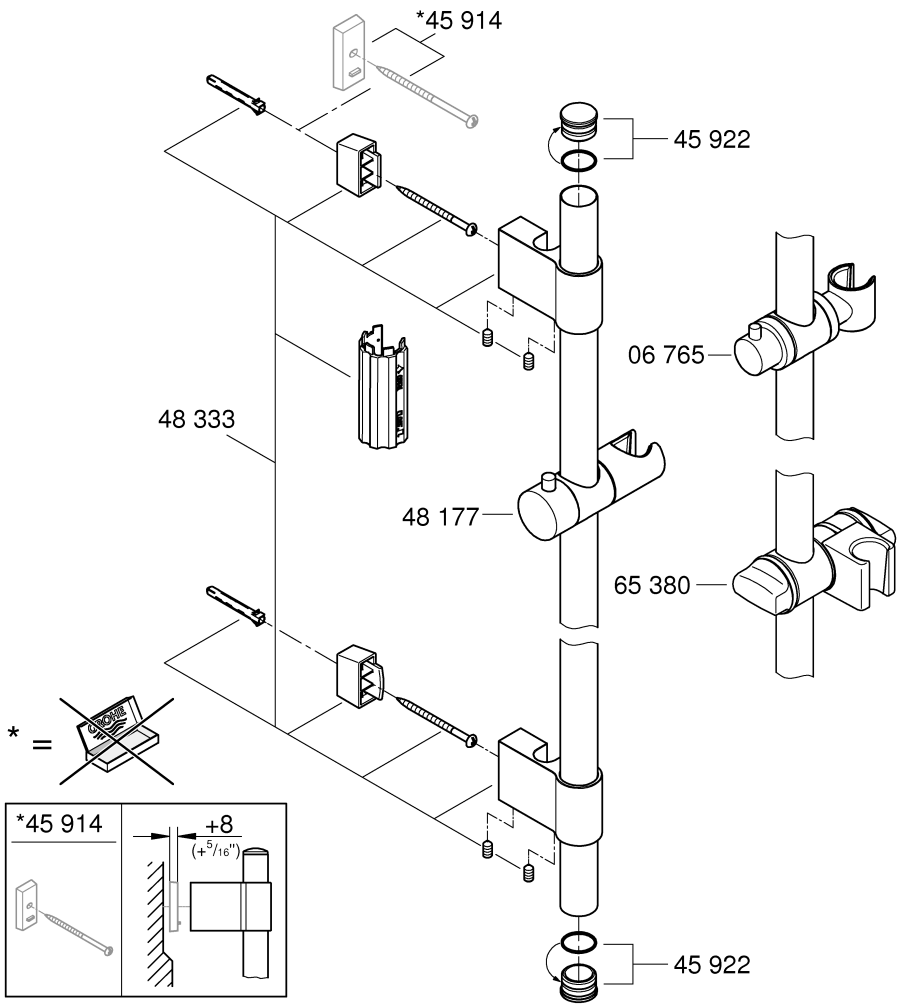

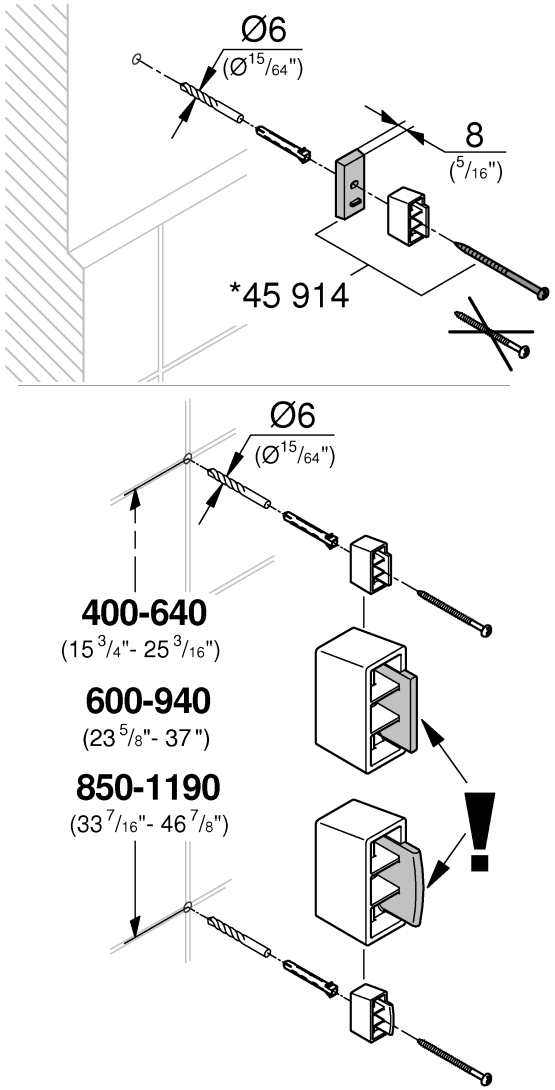

1.

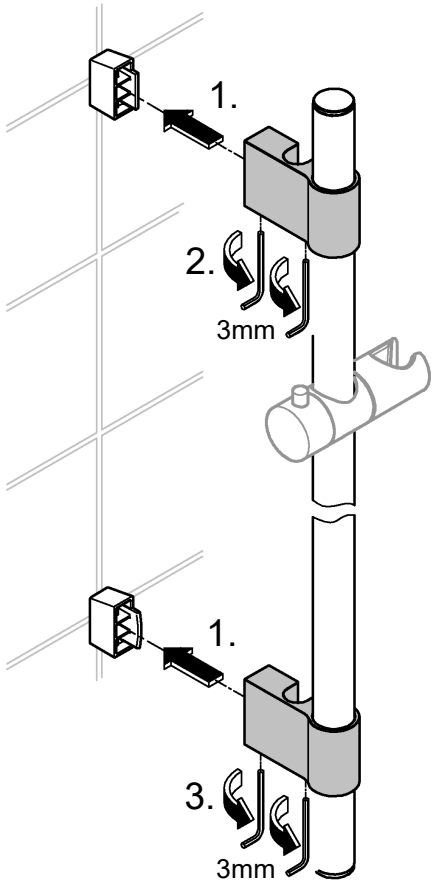

2.